# 48" ORLO MAHOGANY CONSOLE VANITY - ESPRESSO BROWN - VANITY CABINET ONLY

SKU: 564703
Code: SH66248088



**FEATURES**

Material: Wood
Product Finish: Espresso Brown
Number of Drawers: 4
Soft-Close Slides: Yes
Full Extension Drawer Slides: Yes
Dovetail Drawers: Yes
Adjustable Shelves: No
Electrical Outlet: No
Hardware Finish: Brushed Gold
Hardware Material: Brass
Built-In Adjusters: Yes

**ADDITIONAL FEATURES**

- Wood frame with engineered wood panels.
- See Installation Instructions for directions to attach the vanity top and sink.
- All dimensions are (± 1/2").

REVISED 8/25/2026

# 48" ORLO MAHOGANY CONSOLE VANITY - ESPRESSO BROWN - VANITY CABINET ONLY

SKU: 564703
Code: SH66248088

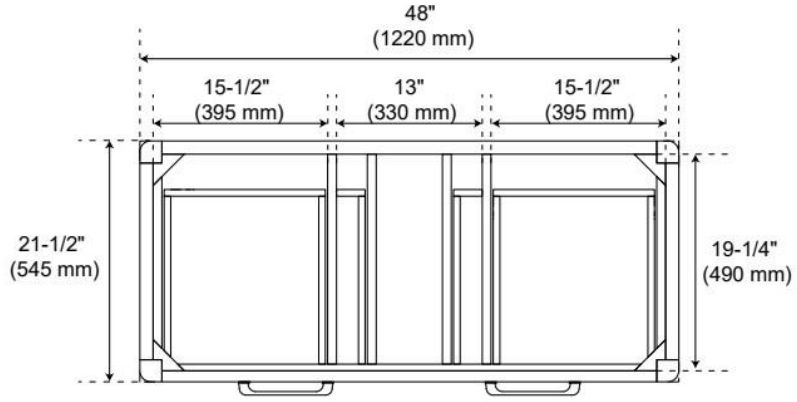


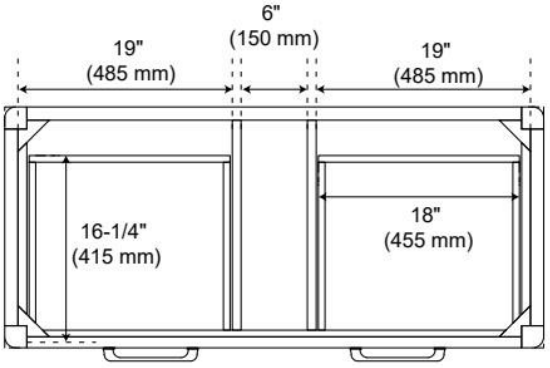


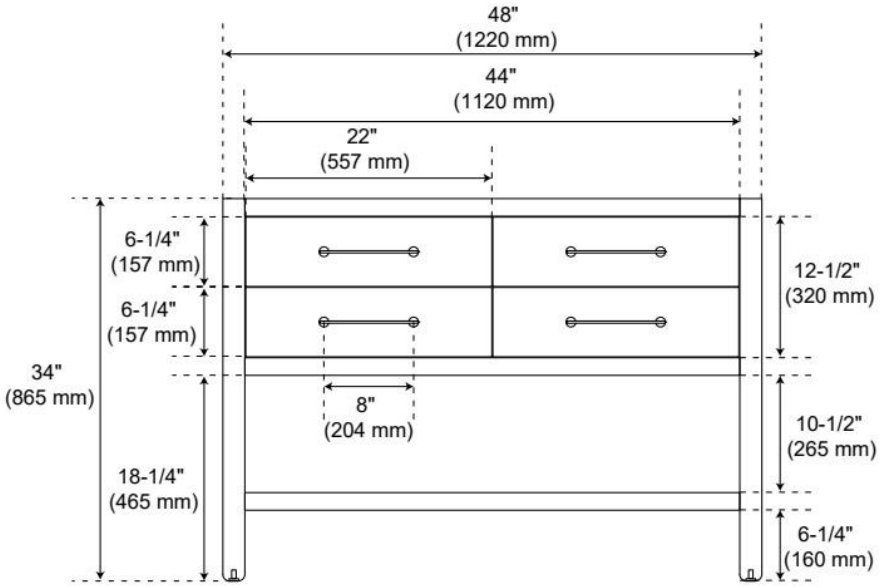


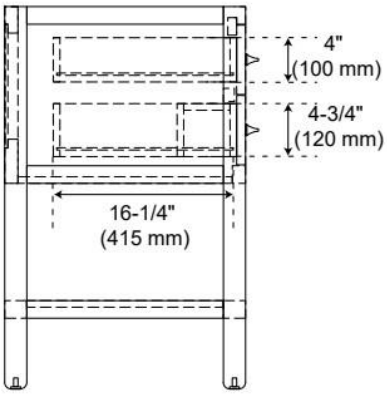


REVISED 8/25/2026