36" ORLO MAHOGANY CONSOLE VANITY WITH UNDERMOUNT SINK - ESPRESSO BROWN

SKU: 955304-36-um
Code: SH564728, SH564729, SH564730



FEATURES

Material: Wood
Product Finish: Espresso Brown
Number of Drawers: 2
Soft-Close Slides: Yes
Full Extension Drawer Slides: Yes
Dovetail Drawers: Yes
Adjustable Shelves: No
Electrical Outlet: No
Hardware Finish: Brushed Gold
Hardware Material: Brass
Built-In Adjusters: Yes

Massachusetts Accepted, LISTED ID: 506895

ADDITIONAL FEATURES

- Includes a matching backsplash and white porcelain sink.
- Polished Carrara Marble is sourced from Italy.
- Each stone top is carved from a single piece of stone and will feature natural variations.
- Wood frame with engineered wood panels.
- See Installation Instructions for directions to attach the vanity top and sink.
- All dimensions are (± 1/2").

REVISED 8/24/2026

36" ORLO MAHOGANY CONSOLE VANITY WITH UNDERMOUNT SINK - ESPRESSO BROWN

SKU: 955304-36-um
Code: SH564728, SH564729, SH564730

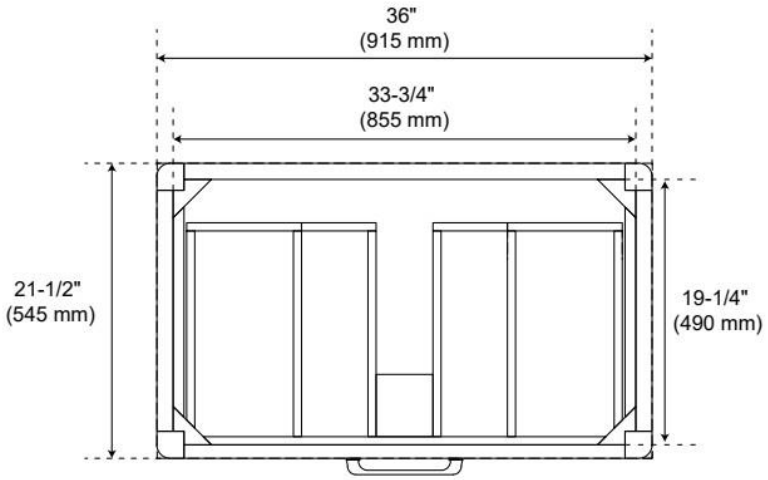

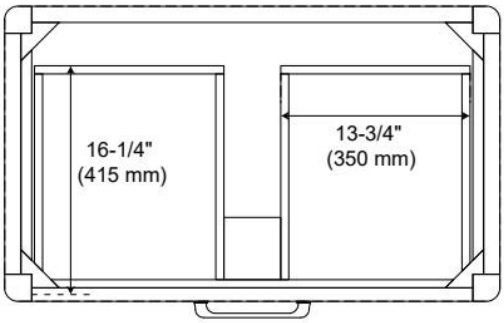

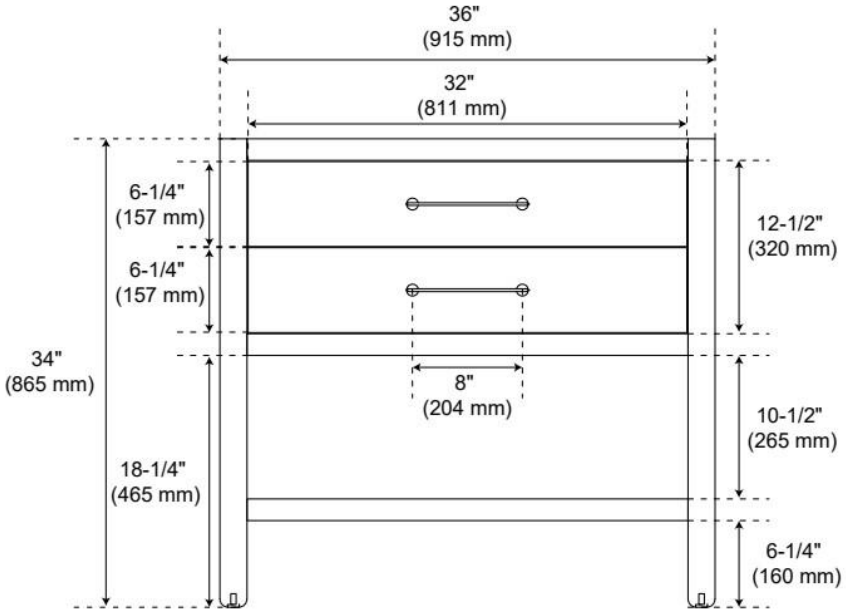

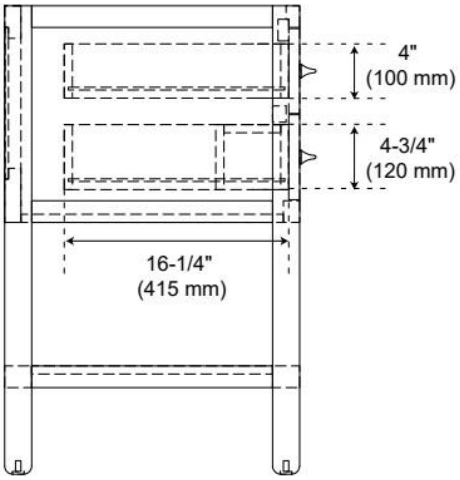

REVISED 8/24/2026