60" ORLO MAHOGANY CONSOLE DOUBLE VANITY WITH RECT UNDERMOUNT SINKS - ESPRESSO

SKU: 955304-60-rumb
Code: SH564747, SH564748, SH564749, SH564750, SH564751, SH564752, SH564753, SH564754, SH564755



FEATURES

Material: Wood
Product Finish: Espresso Brown
Number of Drawers: 4
Soft-Close Slides: Yes
Full Extension Drawer Slides: Yes
Dovetail Drawers: Yes
Adjustable Shelves: No
Electrical Outlet: No
Hardware Finish: Brushed Gold
Hardware Material: Brass
Built-In Adjusters: Yes

Massachusetts Accepted, LISTED ID: 506897

ADDITIONAL FEATURES

- Includes a matching backsplash and white porcelain sinks.
- Polished Carrara Marble is sourced from Italy.
- Each stone top is carved from a single piece of stone and will feature natural variations.
- Wood frame with engineered wood panels.
- See Installation Instructions for directions to attach the vanity top and sink.
- All dimensions are (± 1/2").

REVISED 8/25/2026

60" ORLO MAHOGANY CONSOLE DOUBLE VANITY WITH RECT UNDERMOUNT SINKS - ESPRESSO

SKU: 955304-60-rumb
Code: SH564747, SH564748, SH564749, SH564750, SH564751, SH564752, SH564753, SH564754, SH564755

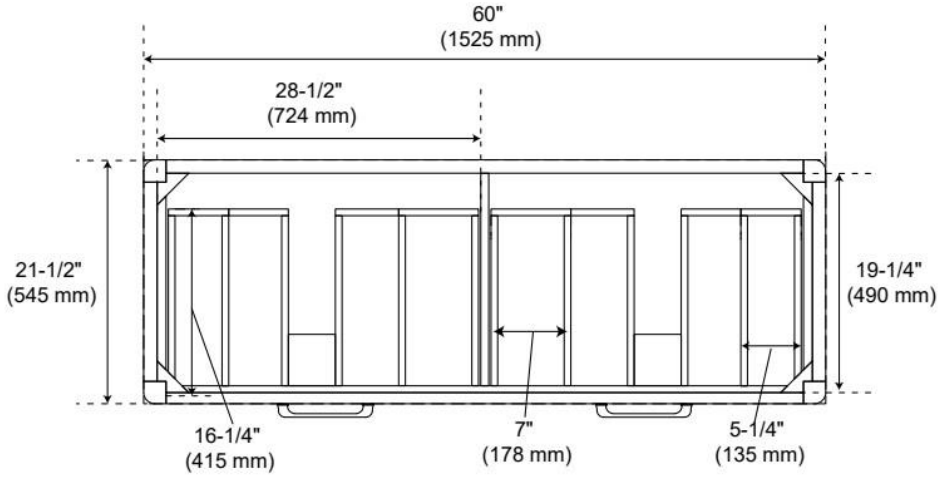

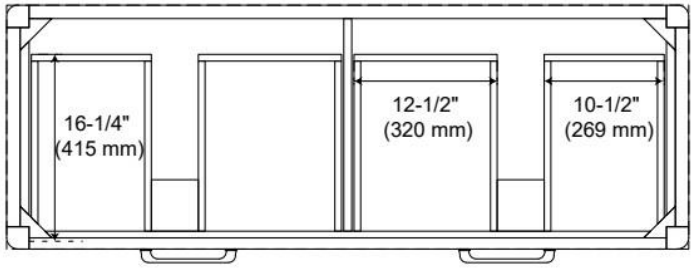

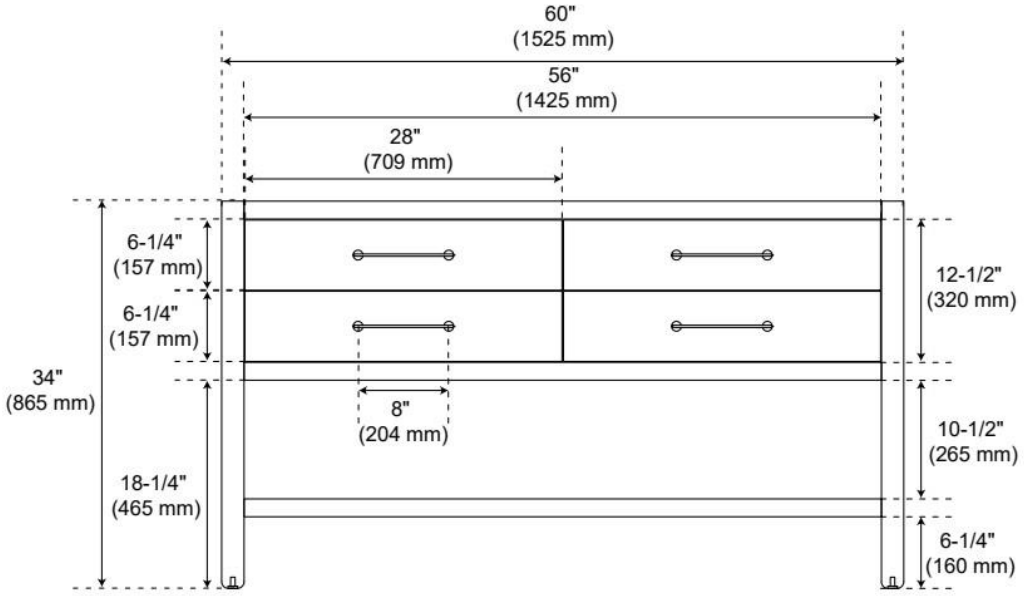

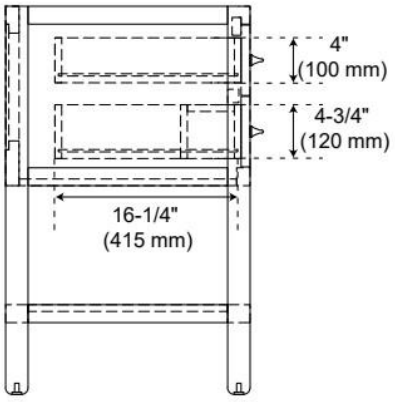

REVISED 8/25/2026