72" ORLO MAHOGANY CONSOLE DOUBLE VANITY WITH UNDERMOUNT SINKS - ESPRESSO BROWN

SKU: 955304-72-um
Code: SH564768, SH564769, SH564770



FEATURES

Material: Wood
Product Finish: Espresso Brown
Number of Drawers: 6
Soft-Close Slides: Yes
Full Extension Drawer Slides: Yes
Dovetail Drawers: Yes
Adjustable Shelves: No
Electrical Outlet: No
Hardware Finish: Brushed Gold
Hardware Material: Brass
Built-In Adjusters: Yes

Massachusetts Accepted, LISTED ID: 506895

ADDITIONAL FEATURES

- Includes a matching backsplash and white porcelain sinks.
- Polished Carrara Marble is sourced from Italy.
- Each stone top is carved from a single piece of stone and will feature natural variations.
- Wood frame with engineered wood panels.
- Removable drawer dividers included to customize to your storage needs.
- See Installation Instructions for directions to attach the vanity top and sink.
- All dimensions are (± 1/2").

REVISED 8/24/2026

72" ORLO MAHOGANY CONSOLE DOUBLE VANITY WITH UNDERMOUNT SINKS - ESPRESSO BROWN

SKU: 955304-72-um
Code: SH564768, SH564769, SH564770

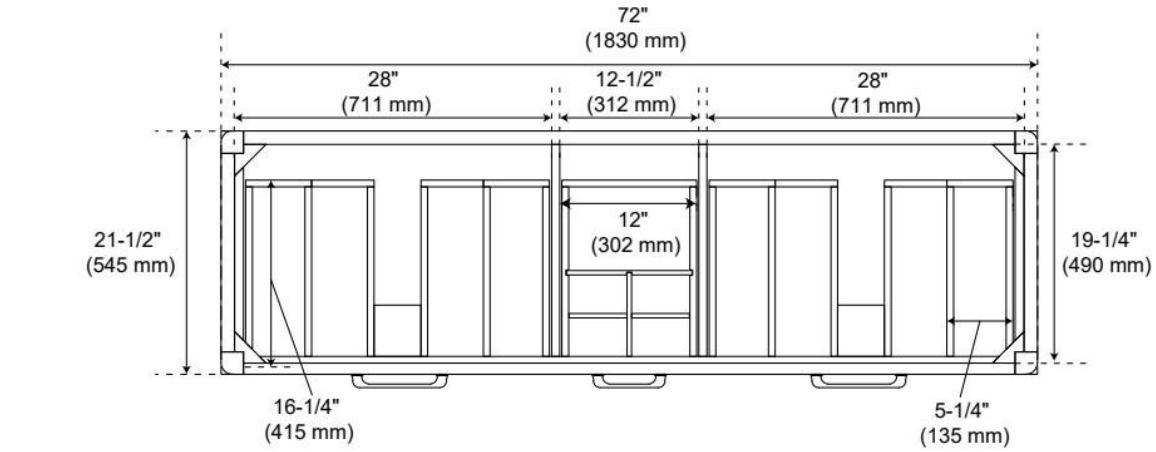

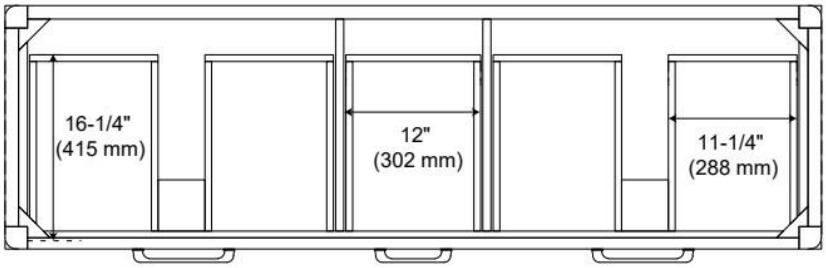

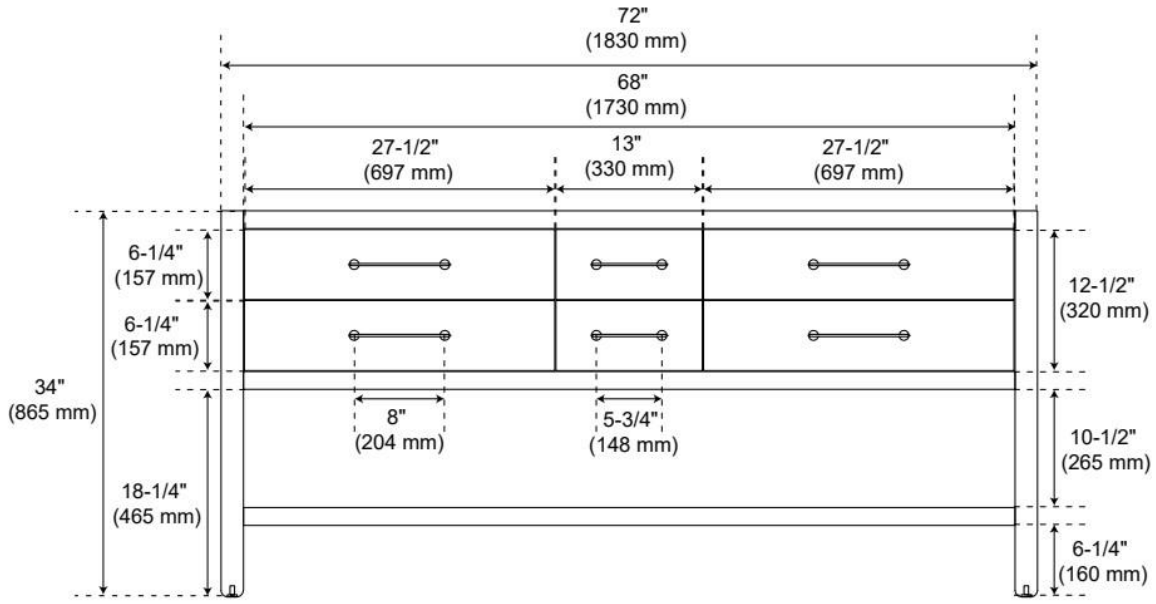

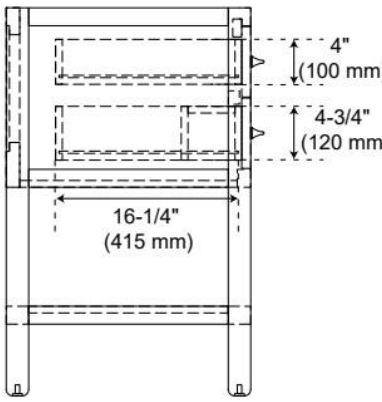

REVISED 8/24/2026