FundamentALL 6-5/8" DIVERTER TUB SPOUT

Product Code: SHTS80

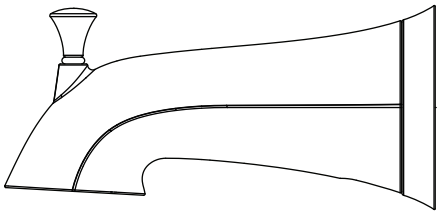

Product Features

- Material: Zinc
- Connection Type: 1/2" CTS Slip-Fit

Finish Options

- AGBR - Aged Brass
- BG - Brushed Gold
- CP - Chrome
- MB - Matte Black
- PN - Polished Nickel
- ZBN - Brushed Nickel

Codes and Certifications

- Meets ASME A112.18.1 / CSA B125.1
- cUPC/IAPMO listed
- Massachusetts Accepted
- CEC listed

Revised: 07/10/26

FundamentALL 6-5/8" DIVERTER TUB SPOUT

Product Code: SHTS80

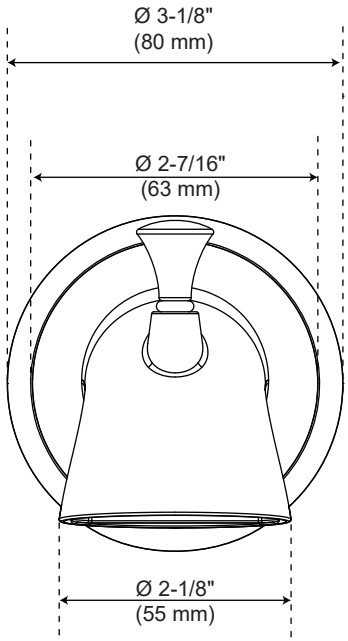

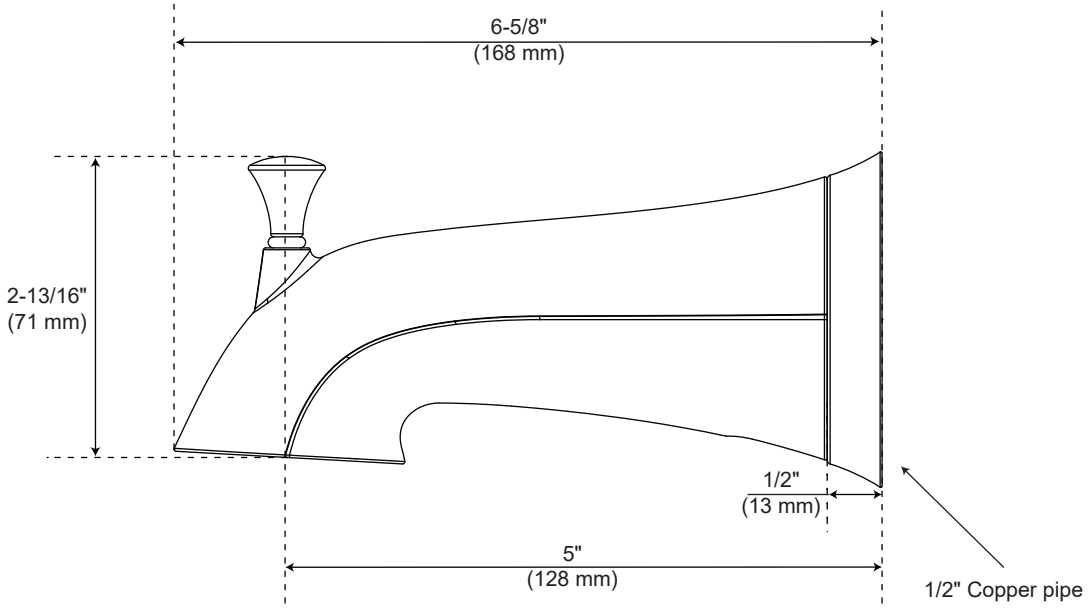

All dimensions and specifications are nominal and may vary.

Revised: 07/10/26